Product End-of-Life Disassembly Instructions

Product Category: *Networking*
Marketing Name / Model [List multiple models if applicable.]
HPE Aruba 6410 Chassis
HPE Aruba 6410 v2 Chassis

Purpose: The document is intended for use by end-of-life recyclers or treatment facilities. It provides the basic instructions for the disassembly of HPE products to remove components and materials requiring selective treatment, as defined by Directive 2012/19/EU of the European Parliament and of the Council on Waste Electrical and Electronic Equipment (WEEE).

1.0 Items Requiring Selective Treatment

1.1 Items listed below are classified as requiring selective treatment.
1.2 Enter the quantity of items contained within the product which require selective treatment in the right column, as applicable.

Item Description	Notes	Quantity of items included in product
Printed Circuit Boards (PCB) or Printed Circuit Assemblies (PCA)	With a surface greater than 10 sq cm	4
Batteries	All types including standard alkaline and lithium coin or button style batteries	0
Mercury-containing components	For example, mercury in lamps, display backlights, scanner lamps, switches, batteries	0
Liquid Crystal Displays (LCD) with a surface greater than 100 sq cm	Includes background illuminated displays with gas discharge lamps	0
Cathode Ray Tubes (CRT)		0
Capacitors / condensers (Containing PCB/PCT)		0
Electrolytic Capacitors / Condensers measuring greater than 2.5 cm in diameter or height		0
External electrical cables and cords		0
Gas Discharge Lamps		0
Plastics containing Brominated Flame Retardants weighing > 25 grams (not including PCBs or PCAs already listed as a separate item above)		0
Components and parts containing toner and ink, including liquids, semi-liquids (gel/paste) and toner	Include the cartridges, print heads, tubes, vent chambers, and service stations.	0
Components and waste containing asbestos		0

Copyright 2018 Hewlett Packard Enterprise Development LP

HPE instructions for this template are available at MF877-01

Item Description	Notes	Quantity of items included in product
Components, parts and materials containing refractory ceramic fibers		0
Components, parts and materials containing radioactive substances		0

2.0 Tools Required

List the type and size of the tools that would typically be used to disassemble the product to a point where components and materials requiring selective treatment can be removed.

Tool Description	Tool Size (if applicable)
Torx Screw Drivers	T-10
Torx Screw Drivers	T-20

3.0 Product Disassembly Process

3.1 List the basic steps that should typically be followed to remove components and materials requiring selective treatment:

1. See 3.2a for pictorial disassembly instruction on removing the 29 T-10 screws
2. See 3.2a for pictorial disassembly instruction on removing the 8 T-10 screws
3. See 3.2b for pictorial disassembly instruction on removing the 24 T-10 screws
4. See 3.2b for pictorial disassembly instruction on removing the 2 T-20 screws
5. See 3.2b for pictorial disassembly instruction on removing the 2 T-10 screws
6. See 3.2b for pictorial disassembly instruction on removing the 2 T-10 screws

3.2 Optional Graphic. If the disassembly process is complex, insert a graphic illustration below to identify the items contained in the product that require selective treatment (with descriptions and arrows identifying locations).

Copyright 2018 Hewlett Packard Enterprise Development LP

HPE instructions for this template are available at MF877-01

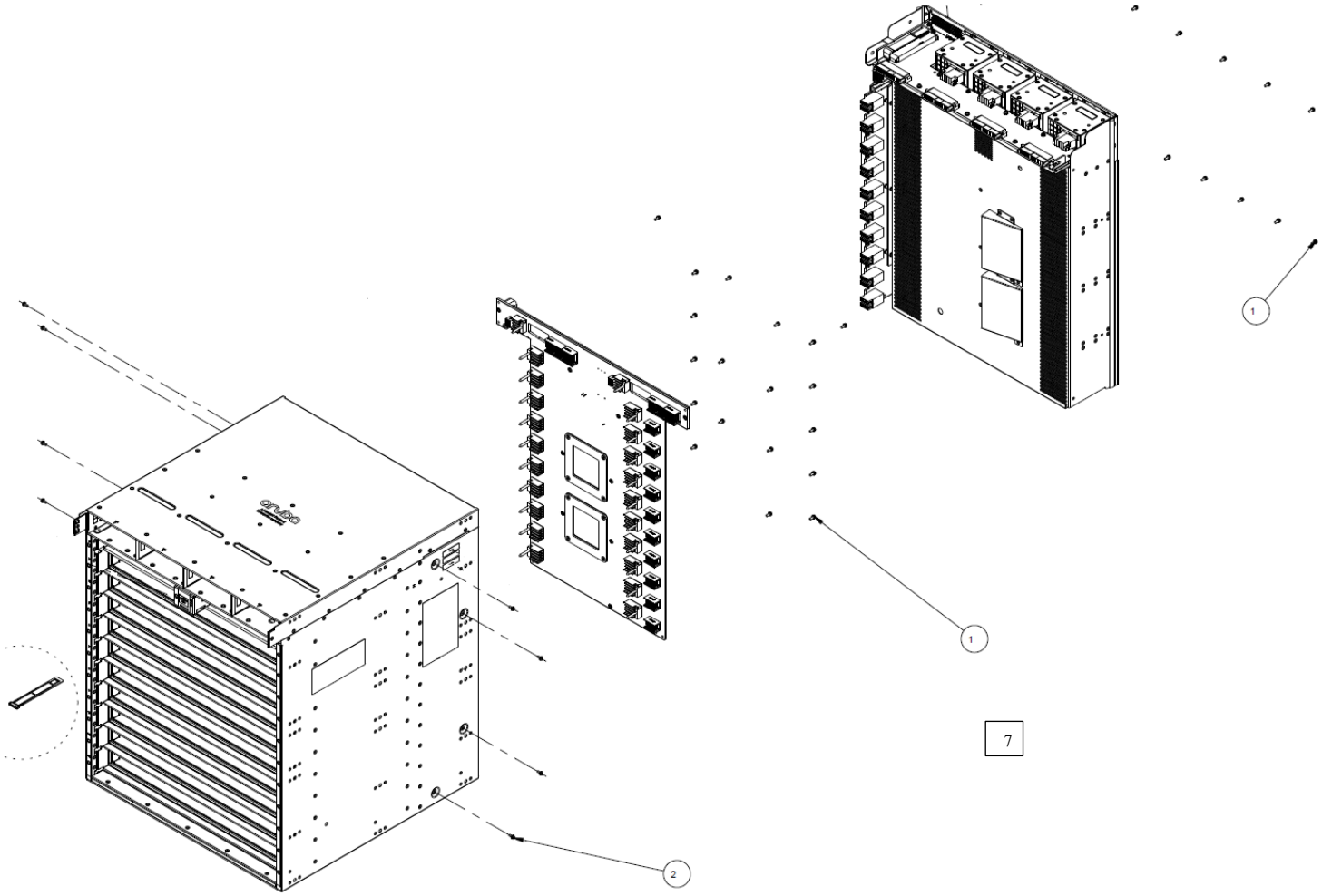

3.2a

Copyright 2018 Hewlett Packard Enterprise Development LP

HPE instructions for this template are available at MF877-01

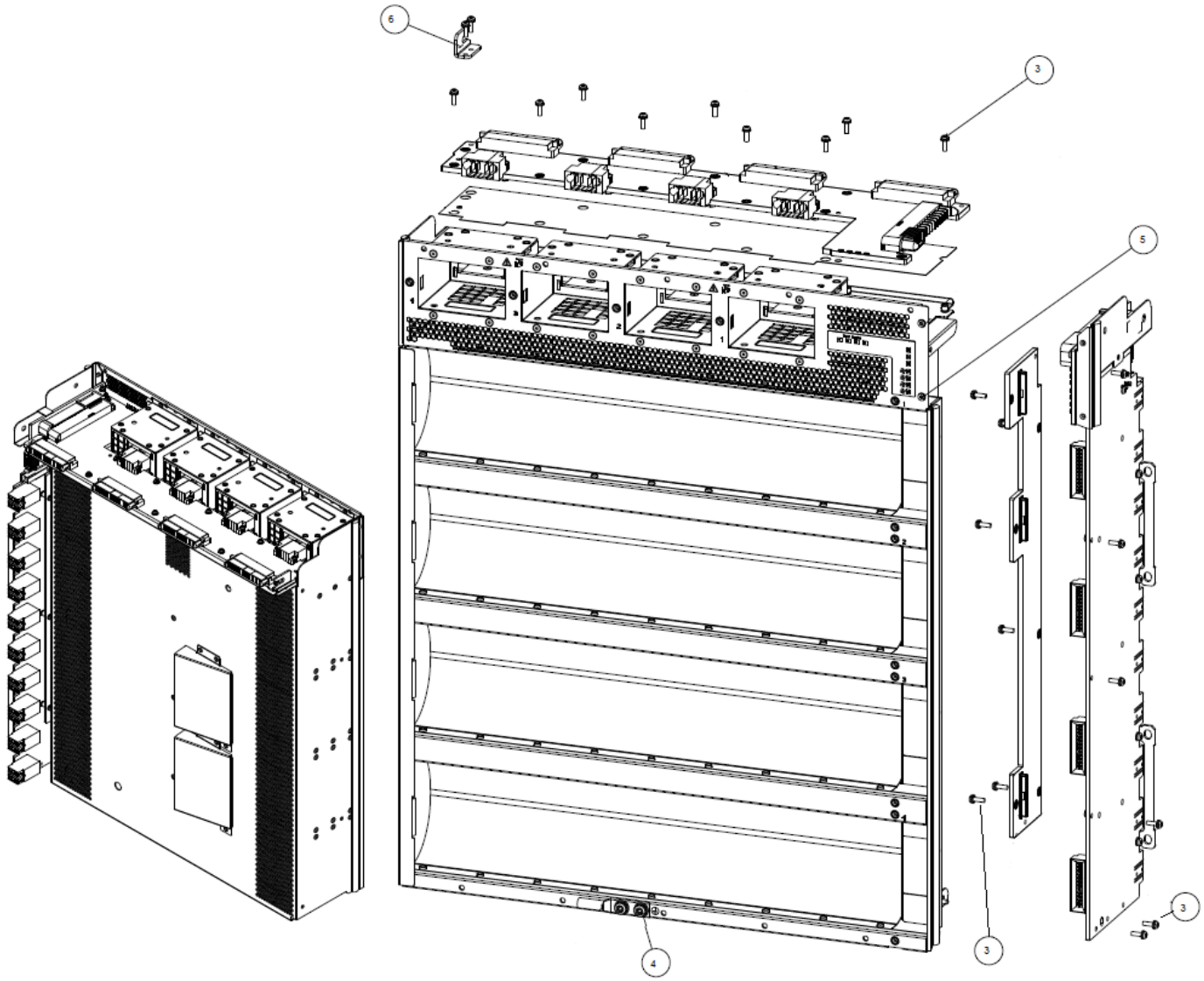

3.2b

Copyright 2018 Hewlett Packard Enterprise Development LP

HPE instructions for this template are available at MF877-01